EXPERIMENT 5

Arya Basak

23MS233

AIM:

Study of 555 Timer IC as Astable multivibrator with different frequency.

ELECTRONIC COMPONENTS REQUIRED:

- Power supply, 1 No: +15 V
- Registers: 1 kΩ, 10 kΩ, 100 kΩ, and 1 MΩ
- Capacitors: 0.001µF, 0.01µF, 0.1µF, 1µF, and 10µF
- IC 555: 1 No
- LED: 1 Nos
- Breadboard = 1 No
- CRO = 1 No
- Single strand wires = 4 - 5 Nos.

THEORY:

The 8-pin 555 timer is one of the most useful ICs ever made and it is used in many projects. A popular version is the **NE555** and this is suitable in most cases where a '555 timer' is specified. The 556 is a dual version of the 555 housed in a 14-pin package. The two timers (A and B) share the same power supply pins. The below circuit diagrams show a 555, but they could all be adapted to use one half of a 556.

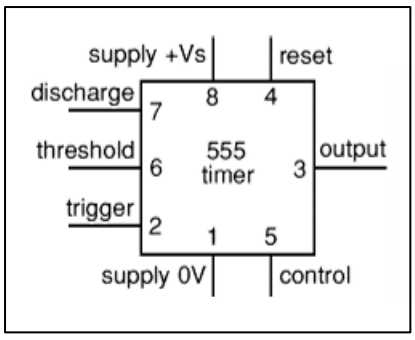

Figure 1: Circuit Symbol of 555 timer

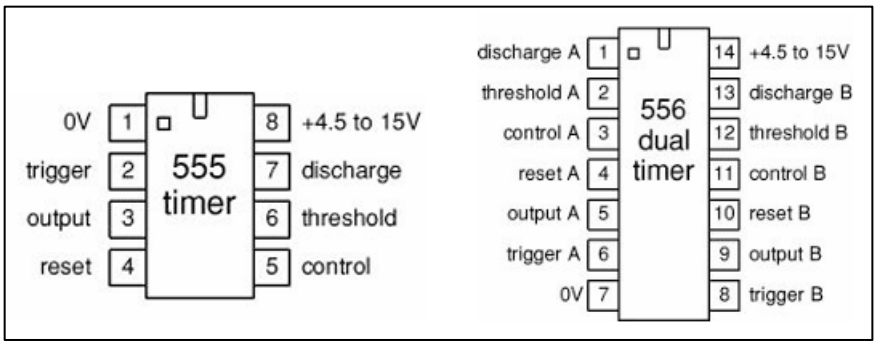

Figure 2: Actual pin configurations of 555 and 556 timers

Low power versions of the 555 are made, such as the **ICM7555**, but these should only be used when specified (to increase battery life) because their maximum output current of about 20mA (with a 9V supply) is too low for many standard 555 circuits. The **ICM7555** has the same pin arrangement as a standard 555.

The circuit symbol for a 555 (and 556) is a box with the pins arranged to suit the circuit diagram: for example, 555 pin 8 at the top for the $+V_s$ supply, 555 pin 3 output on the right. Usually just the pin numbers are used and they are not labelled with their function.

The 555 and 556 can be used with a supply voltage (V_s) in the range 4.5 to 15V (18V absolute maximum). Standard 555 and 556 ICs create a significant 'glitch' on the supply when their output changes state. This is rarely a problem in simple circuits with no other ICs, but in more complex circuits a smoothing capacitor (e.g., 100µF) should be connected across the $+V_s$ and 0V supply near the 555 or 556. The input and output pin functions are described briefly below and there are fuller explanations covering the various circuits:

- **Astable** - producing a square wave
- **Monostable** - producing a single pulse when triggered

<u>Inputs of 555/556:</u>

1. **Trigger input:** when < 1/3 V_s ('active low') this makes the output high ($+V_s$). It monitors the discharging of the timing capacitor in an astable circuit. It has a high input impedance > 2MΩ.
2. **Threshold input:** when > 2/3 V_s ('active high') this makes the output low (0V)*. It monitors the charging of the timing capacitor in astable and monostable circuits. It has a high input impedance > 10MΩ.

   ***(provided the trigger input is > 1/3 V_s, otherwise the trigger input will override the threshold input and hold the output high ($+V_s$)).
3. **Reset input:** When less than about 0.7V ('active low') this makes the output low (0V), overriding other inputs. When not required it should be connected to $+V_s$. It has an input impedance of about 10kΩ.
4. **Control input:** This can be used to adjust the threshold voltage which is set internally to be 2/3 V_s. Usually this function is not required and the control input is connected to 0V with a 0.01µF capacitor to eliminate electrical noise. It can be left unconnected if noise is not a problem.
5. **The discharge pin** is not an input, but it is listed here for convenience. It is connected to 0V when the timer output is low and is used to discharge the timing capacitor in astable and monostable circuits.

555/556 Astable:

An astable circuit produces a 'square wave'. This is a digital waveform with sharp transitions between low (0V) and high ($+V_s$). Note that the durations of the low and high states may be different. The circuit is called an astable because it is not stable in any state - the output is continually changing between 'low' and 'high'. The time period (T) of the square wave is the time for one complete cycle, but it is usually better to consider frequency (f) which is the number of cycles per second.

$$T = 0.7 \times (R_1 + 2R_2) \times C_1$$

$$f = 1.4/[(R_1 + 2R_2) \times C_1]$$

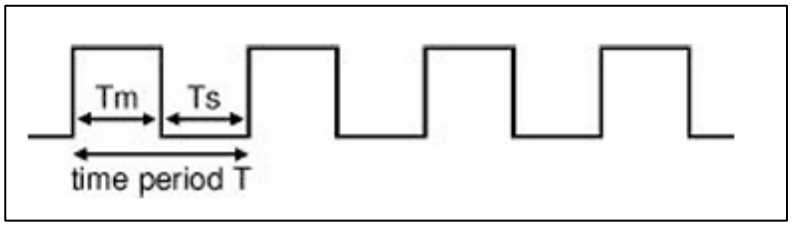

Figure 3: 555 astable square-wave output

T = time period in seconds (s)

f = frequency in hertz (Hz)

R_1 = resistance in ohms (Ω)

R_2 = resistance in ohms (Ω)

C_1 = capacitance in farads (F)

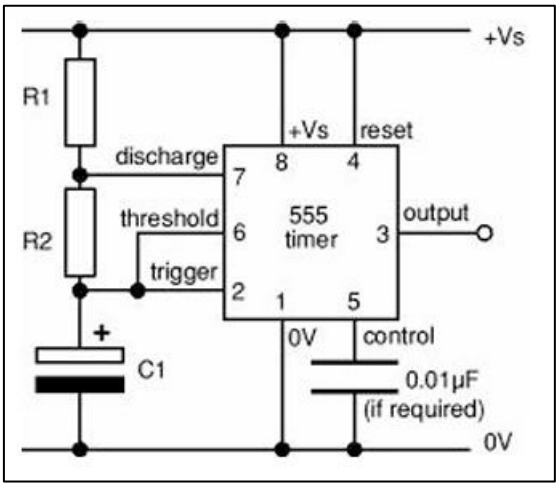

Figure 4: 555 astable circuit

The time period can be split into two parts: **$T = T_m + T_s$**

- **Mark time (output high):** $T_m = 0.7 \times (R_1 + R_2) \times C_1$
- **Space time (output low):** $T_s = 0.7 \times R_2 \times C_1$

Many circuits require T_m and T_s to be almost equal; this is achieved if R_2 is much larger than R_1.

For a standard astable circuit T_m cannot be less than T_s, but this is not too restricting because the output can both sink and source current. For example, an LED can be made to flash briefly with long gaps by connecting it (with its resistor) between $+V_s$ and the output. This way the LED is on during T_s, so brief flashes are achieved with R_1 larger than R_2, making T_s short and T_m long. If T_m must be less than T_s, a diode can be added to the circuit as explained under duty cycle below.

Choosing R_1, R_2 and C_1:

R_1 and R_2 should be in the range 1kΩ to 1MΩ. It is best to choose C_1 first because capacitors are available in just a few values.

- Choose C_1 to suit the frequency range you require (use the table as a guide).
- Choose R_2 to give the frequency (f) you require. Assume that R_1 is much smaller than R_2 (so that T_m and T_s are almost equal), then you can use:

$$R_2 = \frac{0 \cdot 7}{f \times C_1}$$

- Choose R_1 to be about a tenth of R_2 (1kΩ min.) unless you want the mark time T_m to be significantly longer than the space time T_s.
- If you wish to use a variable resistor it is best to make it R_2.
- If R_1 is variable it must have a fixed resistor of at least 1kΩ in series (this is not required for R_2 if it is variable).

OBSERVATIONS:

Table 1: 555 Astable Frequencies

Sl. No.	C_1 (µF)	R_1 (kΩ)	R_2 (kΩ)	f (Theory)	T_m (Expt)	T_s (Expt)	$T = T_m + T_s$	f (Expt)	% Error
1	0.001	1	10	66.7 kHz	8.6 µs	7.9 µs	16.5 µs	60.7 kHz	9
2	0.001	10	100	6.67 kHz	66.8 µs	64.8 µs	131.6 µs	7.6 kHz	14
3	0.001	100	1000	667 Hz	636 µs	620 µs	1.256 ms	796.18 Hz	19
1	0.01	1	10	6.67 kHz	71.6 µs	66.8 µs	138.4 µs	7.23 kHz	8
2	0.01	10	100	667 Hz	664 µs	652 µs	1.316 ms	762.2 Hz	14
3	0.01	100	1000	66.7 Hz	6.76 ms	6.48 ms	13.2 ms	75.76 Hz	14
1	0.1	1	10	667 Hz	524 µs	530 µs	1.054 ms	948.77 Hz	42
2	0.1	10	100	66.7 Hz	4.7 ms	4.76 ms	9.46 ms	107.07 Hz	61
3	0.1	100	1000	6.67 Hz	60.3 ms	57.4 ms	118 ms	8.49 Hz	27
1	1	1	10	66.7 Hz	7.16 ms	6.68 ms	13.840 ms	72.46 Hz	9

2	1	10	100	6.67 Hz	65.8 ms	62.6 ms	128.4 ms	7.78 Hz	17
3	1	100	1000	0.67 Hz	676 ms	632 ms	1.31 s	0.77 Hz	15
1	10	1	10	6.67 Hz	74.4 ms	69.8 ms	144.2 ms	7.37 Hz	10
2	10	10	100	0.67 Hz	676 ms	662 ms	1.34 s	0.75 Hz	12
3	10	100	1000	0.067 Hz	7.62 s	6.86 s	14.48 s	0.07 Hz	0

CONCLUSION:

As can be seen from the above data table, the experimental frequency and the theoretical frequency for different combinations of R_1, R_2 and C_1 are close to each other. Hence, the formula for frequency of 555 astable multivibrator is verified.

SOURCES OF ERROR:

- Resistors (R_1, R_2) typically have ±5% or ±1% tolerance. Capacitors can have large tolerances (±10% to ±20% or more). Since frequency depends on R and C, small variations can cause noticeable errors.
- Real capacitors have leakage current and equivalent series resistance (ESR), affecting charging time.
- Resistance and capacitance values vary with temperature. The IC itself may also behave slightly differently at different temperatures.
- Resistance in wires and breadboard connections and loose connections can cause unstable output.
- Readings may not be taken properly from the oscilloscope/multimeter.